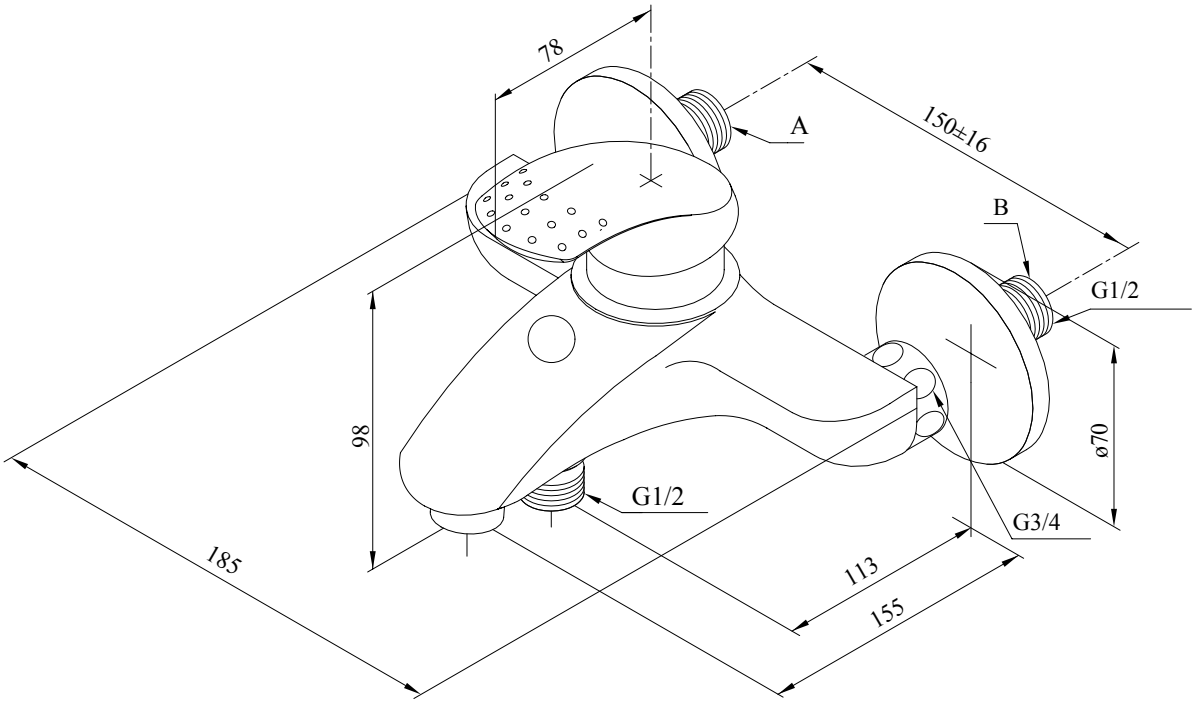
78
A
150±16
B
G1/2
98
ø70
G1/2
G3/4
185
113
155